Climate Cǒntrol™ Multifunction Application Drawing CCM-3

uponor

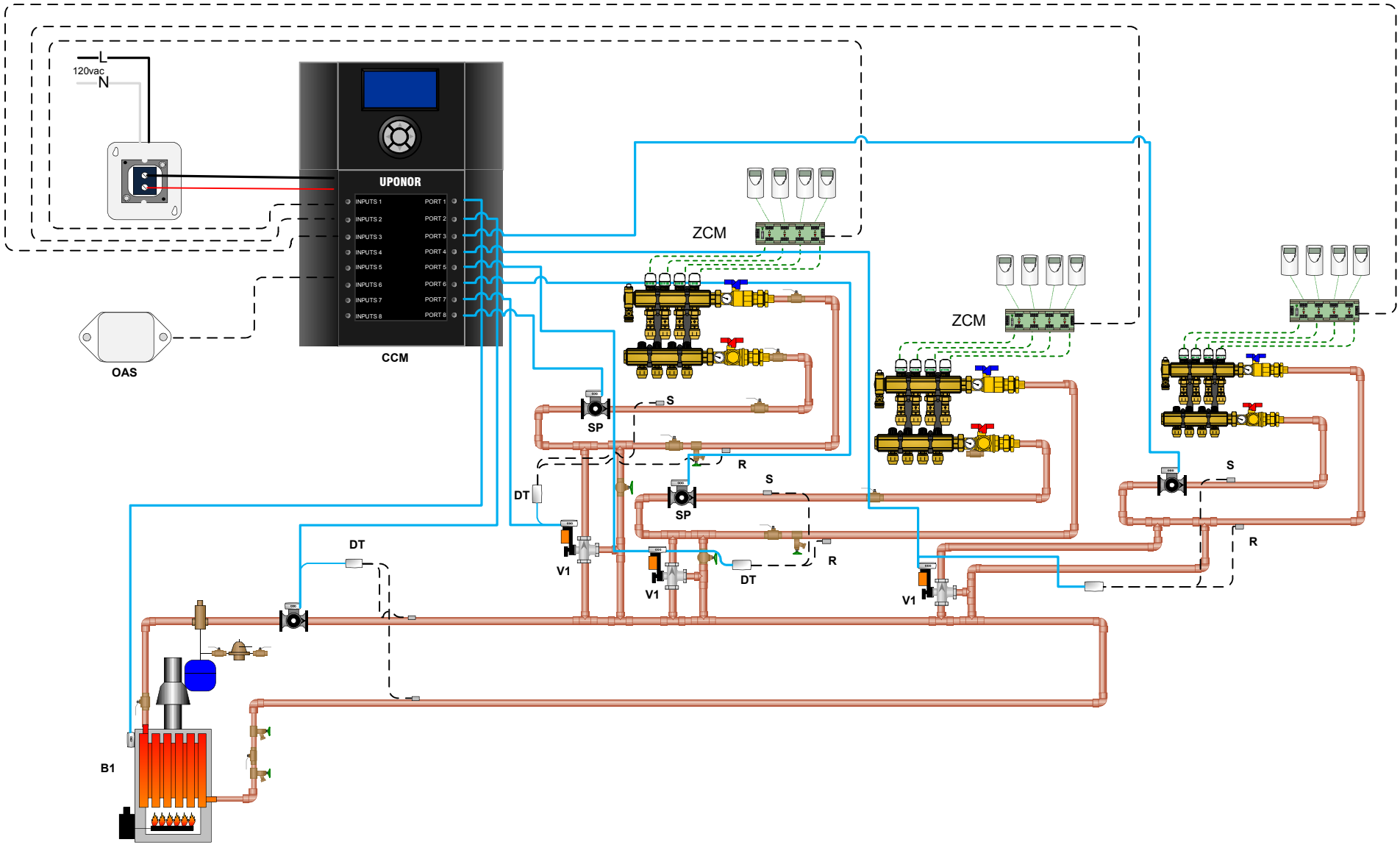

NOTE: This drawing is conceptual only, not an engineered drawing. It is up to the system designer to determine the necessary components for and configuration of the particular system designed, including additional equipment, isolation relays (for loads greater than the control's specified output ratings), and any safety devices which in the judgement of the designer are appropriate. Certain components may have been left out on this drawing for the purpose of clarity. Mechanical considerations such as tee spacing, flow control, pipe sizing and pump selection, is the responsibility of the installing contractor. Local codes and trade practices must be followed.

Relays | Pump | DualSensor | Modulating Mixing Valve | DHW Sensor | Snow Melt Sensor

OAS = Outdoor Air Sensor
DT = Dual Sensor Supply & Return
S = Supply Temp
R = Return Temp
SM = Snow Melt Sensor

BR = Boiler Enable Relay
PR = Pump Relay
V1= Modulating Valve w/ Actuator
ZMC = Zone Control Module

B1 = Boiler
CCM = Climate Cǒntrol™ Multifunction
PP = Primary Pump
ZP = Zone Pump
SP = Secondary Pump
BP = Boiler Pump

= 120 V (AC)
= Sensor Wire
= 24 V (AC)
= T-stat Wire
= Cat5 Cable

Project:

Uponor Wirsbo
5925 148th Street W.
Apple Valley, MN 55124
Phone: 1-800-321-4739
Fax: 1-952-891-1409
www.wirsbo.com

Drawn by:	**Checked by:**
Rep:	**DATE:**

Climate Cŏntrol™ Multifunction Application Drawing CCM-3
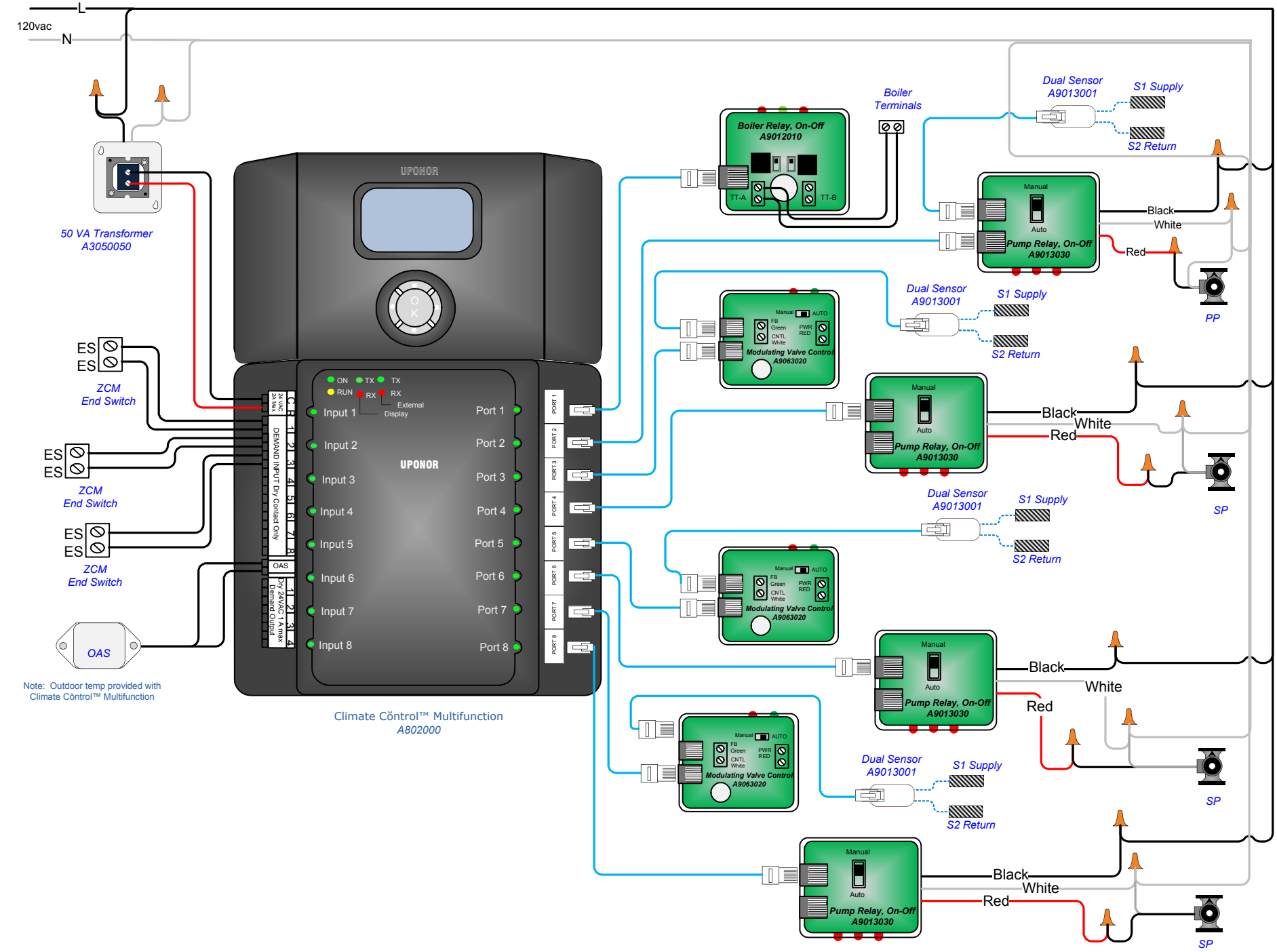
uponor