ASTM Ecoflex® Thermal Single

Submittal Information
Revision C: Nov. 11, 2009

Project Information

Job Name:

Location: | Part No. Ordered:

Engineer: | Date Submitted:

Contractor: | Submitted By:

Manufacturer's Representative: | Approved By:

Technical Data

Service Pipe:	Crosslinked polyethylene (PEX-a) Engel-method tubing that conforms to German DIN 4726; smoothness value of 0.02 mil; NSF certified SDR-9
Insulation:	Multilayered, closed-cell, PEX-foam insulation with a thermal conductivity of 0.26 BTU in./sq. ft./hour/°F; vapor permeability of 0.1g/100 sq. in./day
Jacket:	Corrugated seamless high-density polyethylene (HDPE), UV-protected
Operating Limits:	-58°F to 203°F at 87 psi (-50°C to 95°C at 6 bar)

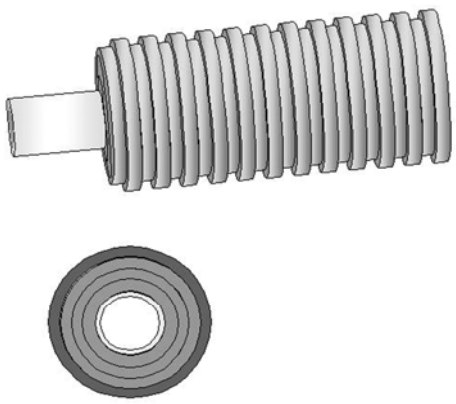

Product Information and Application Use

Uponor's ASTM Ecoflex® Thermal Single is a pre-insulated pipe for buried or aboveground commercial and residential hydronic radiant heating and cooling applications. Service pipes are made from durable Engel-method crosslinked polyethylene (PEX-a) tubing with multilayer PEX-foam insulation and covered by a corrugated, waterproof HDPE jacket. Use with ProPEX® fittings or WIPEX™ dezincification-resistant brass compression fittings.[1]

✓	Part Description	Part Number	Jacket Size	Service Pipe OD	Service Pipe ID	Foam Thickness	Insulation Value	Weight (lb./ft.)
☐	1" Thermal Single with 5.5" Jacket, 600-ft.	5015510	5.5"	1.125"	0.862"	1.85"	R-7.12	0.75 lbs.
☐	1¼" Thermal Single with 5.5" Jacket, 500-ft.	5015513	5.5"	1.375"	1.054"	1.65"	R-6.36	0.85 lbs.
☐	1½" Thermal Single with 6.9" Jacket, 300-ft.	5016915	6.9"	1.625"	1.244"	2.13"	R-8.18	1.40 lbs.
☐	2" Thermal Single with 6.9" Jacket, 300-ft.	5016920	6.9"	2.125"	1.629"	1.93"	R-7.42	1.80 lbs.
☐	2½" Thermal Single with 6.9" Jacket, 300-ft.	5016925	6.9"	2.625"	2.011"	1.65"	R-6.36	1.97 lbs.
☐	3" Thermal Single with 7.9" Jacket, 300-ft.	5017930	7.9"	3.125"	2.398"	1.93"	R-7.42	2.80 lbs.
☐	4" Thermal Single with 7.9" Jacket, 300-ft.	5017940	7.9"	4.125"	3.169"	1.26"	R-4.83	3.70 lbs.

Installation

Install Ecoflex Thermal Single pre-insulated pipe in buried or aboveground hydronic radiant heating and cooling applications. Use ProPEX or WIPEX DZR Brass Compression Fittings. Ecoflex End Caps are required on all exposed ends of Ecoflex pipes to avoid ground water contamination. For more details, refer to the Pre-insulated Pipe Systems Design and Installation manual.

Standards

ASTM F876, F877 and F1960; CSA B137.5; NSF 14

Codes

N/A

Listings

NSF/ANSI 14-certified (SDR-9)

Related Applications

Pre-insulated Pipe Systems
Radiant Heating and Cooling Systems
Snow and Ice Melting Systems
Permafrost Prevention Systems
Turf Conditioning Systems

Contact Information

Uponor, Inc.
5925 148th Street West
Apple Valley, MN 55124 USA
Phone: (800) 321-4739
Fax: (952) 891-2008
www.uponor-usa.com

Uponor Ltd.
2000 Argentia Road, Plaza 1, Suite 200
Mississauga, ON L5N 1W1 CANADA
Phone: (888) 994-7726
Fax: (800) 638-9517
www.uponor.ca

[1]ProPEX® is a registered trademark of Uponor, Inc. ProPEX™ is a trademark of Uponor Ltd.