ASTM Ecoflex® Potable HDPE

Submittal Information
Revision C: June 11, 2009

Project Information

Job Name:

Location: | Part No. Ordered:

Engineer: | Date Submitted:

Contractor: | Submitted By:

Manufacturer's Representative: | Approved By:

Technical Data

Service Pipe:	High-density polyethylene (HDPE); NSF certified SDR-11
Insulation:	Multilayered, closed-cell, crosslinked polyethylene (PEX) foam insulation with a thermal conductivity of 0.26 BTU in./sq. ft./hour/°F; vapor permeability of 0.1g/100 sq. in./day
Jacket:	Corrugated, seamless HDPE, UV-protected
Operating Limits:	-30°F to 73°F at 160 psig (-34°C to 23°C at 11.0 bar) -30°F to 100°F at 125 psig (-34°C to 38°C at 8.6 bar) -30°F to 120°F at 101 psig (-34°C to 49°C at 6.9 bar) -30°F to 140°F at 80 psig (-34°C to 60°C at 5.5 bar)

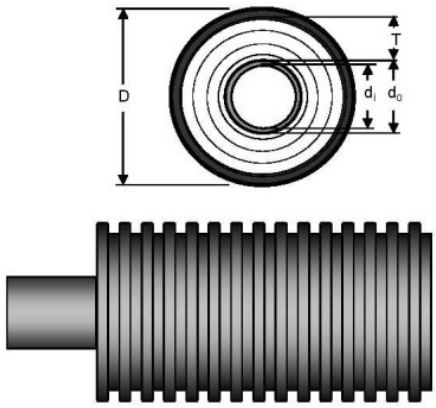

Product Information and Application Use

Uponor's ASTM Ecoflex® Potable HDPE features high-density polyethylene (HDPE) service pipe protected by multilayer PEX-foam insulation and covered by a corrugated, waterproof HDPE jacket. Use Ecoflex Potable HDPE for cold potable-water, cooling and low-temperature heating applications.

✓	Part Description	Part Number	Jacket Size (D)	Service Pipe OD (d_o)	Service Pipe ID (d_i)	Foam Thickness	Insulation Value	Weight (lb./ft.)
☐	1¼" Potable HDPE, 300-ft. coil	5115513	5.5"	1.660"	1.368"	1.54"	R-5.91	1.0 lbs.
☐	1½" Potable HDPE, 300-ft. coil	5115515	5.5"	1.900"	1.554"	1.42"	R-5.45	1.0 lbs.
☐	2" Potable HDPE, 300-ft. coil	5115520	5.5"	2.375"	1.943"	1.18"	R-4.54	1.4 lbs.
☐	3" Potable HDPE, 300-ft. coil	5116930	6.9"	3.500"	2.860"	1.18"	R-4.54	2.4 lbs.
☐	4" Potable HDPE, 300-ft. coil	5117940	7.9"	4.500"	3.680"	1.06"	R-4.09	3.6 lbs.

Installation

Install Ecoflex Potable HDPE in cold potable-water, chilled-water, cooling and low-temperature heating applications. Join pipes through fusion welding, electro-fusion fittings or HDPE compression fittings (not sold by Uponor). For additional information, refer to the Uponor Pre-insulated Pipe Systems Design and Installation Manual.

Standards

PE 3408, PE 3608 or PE 3454; AWWA C906; ASTM F714

Codes

UPC; IPC; NSPC; NPC of Canada

Listings

NSF/ANSI 61 or NSF-pw

Related Applications

Pre-insulated Pipe Systems
Radiant Heating and Cooling Systems
Snow and Ice Melting Systems
Permafrost Prevention Systems
Turf Conditioning Systems

Contact Information

Uponor, Inc.
5925 148th Street West
Apple Valley, MN 55124 USA
Phone: (800) 321-4739
Fax: (952) 891-2008
www.uponor-usa.com

Uponor Ltd.
2000 Argentia Road, Plaza 1, Suite 200
Mississauga, ON L5N 1W1 CANADA
Phone: (888) 994-7726
Fax: (800) 638-9517
www.uponor.ca